VULCAN

CATALOG OF REPLACEMENT PARTS

K SERIES GAS KETTLES

Stationary Kettles

ML-136090	*K20GL*
ML-136091	*K40GL*
ML-136092	*K60GL*

Tilting Kettles

ML-136094	*K20GLT*
ML-136095	*K40GLT*
ML-136096	*K60GLT*

For additional information on Vulcan-Hart Company or to locate an authorized parts and service provider in your area, visit our website at www.vulcanequipment.com

VULCAN-HART
DIVISION OF ITW FOOD EQUIPMENT GROUP, LLC
WWW.VULCANEQUIPMENT.COM

3600 NORTH POINT BLVD.
BALTIMORE, MD 21222

F-35462 Rev C (April 2024)

 © VULCAN-HART COMPANY 2024

Table of Contents

5 DRAW-OFF VALVE ASSEMBLY (2 INCH)
7 DRAW-OFF VALVE ASSEMBLY (3 INCH)
9 PLUG VALVE (2 INCH)
11 CONTROL PANEL (STATIONARY)
13 ELECTRICAL COMPONENTS (STATIONARY)
15 ELECTRICAL COMPONENTS (TILTING)
17 CONTROL PANEL AND ELECTRICAL COMPONENTS (TILTING)
19 GAS HEAT COMPONENTS
21 TILTING COMPONENTS
23 LID AND HANDLE ASSEMBLY
25 KETTLE EXTERIOR
27 PANELS (STATIONARY)
29 PANELS AND FRAME (TILTING)

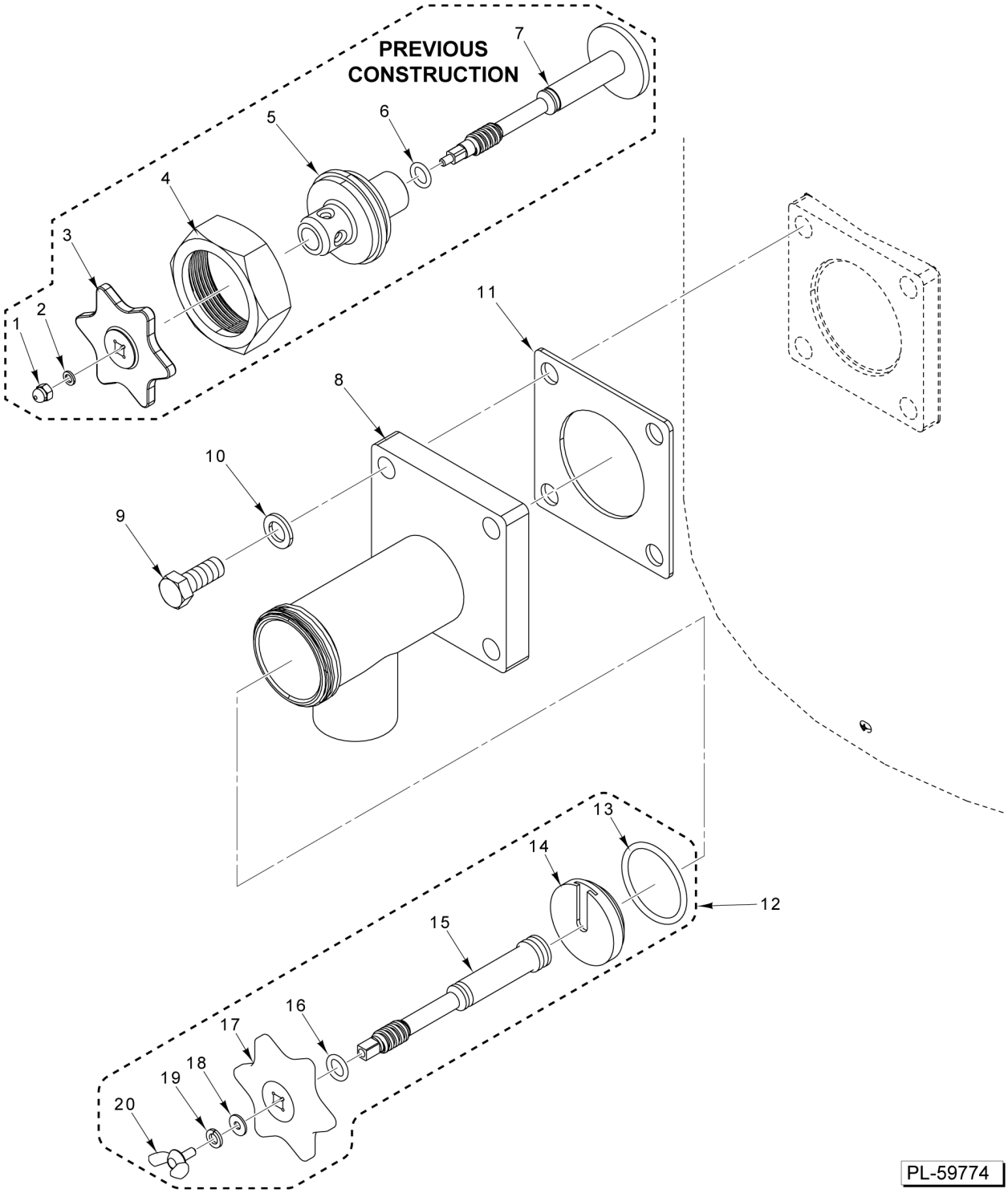

DRAW-OFF VALVE ASSEMBLY
(2 INCH)

DRAW-OFF VALVE ASSEMBLY
(2 INCH)

ILLUS. PL-59774	PART NO.	NAME OF PART	AMT.
1	00-856213-00008	Nut (Previous Construction)	1
2	00-856213-00009	Washer (Previous Construction)	1
3	00-856213-00005	Handle (Previous Construction)	1
4	00-856213-00004	Nut - Hex (Previous Construction)	1
5	00-856213-00006	Retainer (Previous Construction)	1
6	00-856213-00007	O-Ring (Previous Construction)	1
7	00-856213-00003	Disc & Stem Assy. (Previous Construction)	1
8	00-857978-00001	Valve Body (2 In.)	1
9	SC-041-44	Cap Screw 1/2-13 x 1-1/4 Hex Hd. (SST)	4
10	WL-006-35	Lockwasher 1/2 Light (SST)	4
11	00-855830-00001	Gasket - Draw-Off Valve	1
12	00-857918-00001	Plunger - Stem (Incls. Items 13 thru 20) (Current Construction)	1
13	00-857918-00004	O-Ring - Nylon (Current Construction)	1
14	00-857918-00003	Seal - Nylon (2 In.) (Current Construction)	1
15	00-857918-00002	Stem (Current Construction)	1
16	00-857918-00005	O-Ring (Current Construction)	1
17	00-857918-00006	Handle (Current Construction)	1
18	00-857918-00009	Flatwasher (Current Construction)	1
19	00-857918-00008	Lockwasher (Current Construction)	1
20	00-857918-00007	Wingnut (Current Construction)	1

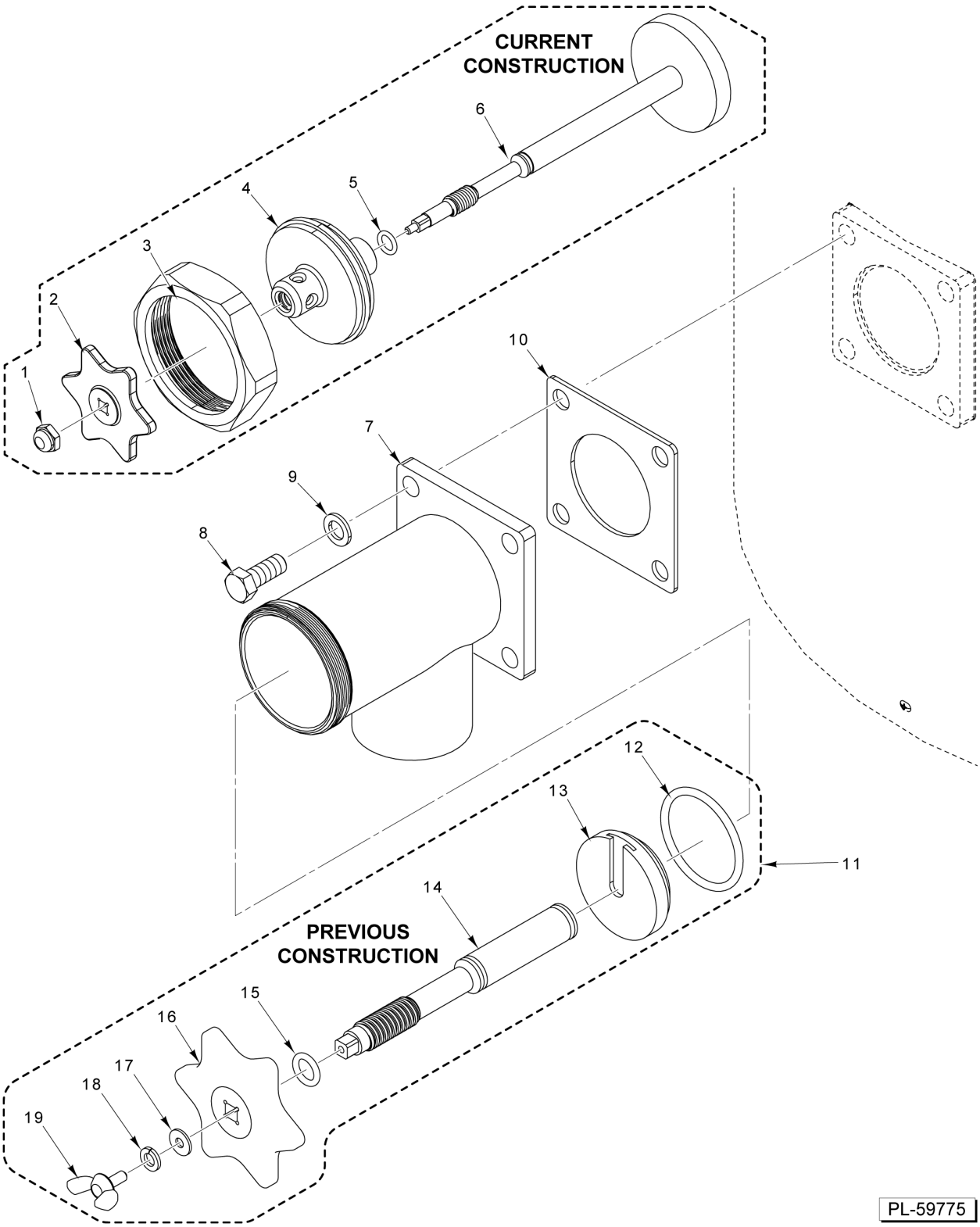

DRAW-OFF VALVE ASSEMBLY
(3 INCH)

DRAW-OFF VALVE ASSEMBLY
(3 INCH)

ILLUS. PL-59775	PART NO.	NAME OF PART	AMT.
1	00-359996-00007	Nut - Acorn (Current Construction)	1
2	00-359996-00005	Handle (Current Construction)	1
3	00-359996-00004	Hex Nut (Current Construction)	1
*4	00-857977-00003	Retainer (Current Construction)	1
5	00-359996-00006	O-ring (Current Construction)	1
**6	00-359996-00002	Disc and Stem Assembly (Current Construction)	1
7	00-857978-00002	Valve Body (3 In.)	1
8	SC-041-44	Cap Screw 1/2-13 x 1-1/4 Hex Hd. (SST)	4
9	WL-006-35	Lockwasher 1/2 Light (SST)	4
10	00-855830-00001	Gasket - Draw-Off Valve	1
11	00-857919-00001	Stem Plunger Assy. (3 In.) (Incls. Items 12 thru 19) (Previous Construction)	1
12	00-857919-00004	O-Ring (Previous Construction)	1
13	00-857919-00003	Seal, Nylon 3 In. (Previous Construction)	1
14	00-857919-00002	Stem (Previous Construction)	1
15	00-857919-00005	O-Ring (Previous Construction)	1
16	00-857919-00006	Handle (SST) (Previous Construction)	1
17	00-857919-00009	Washer - Flat (SST) (Previous Construction)	1
18	00-857919-00008	Washer - Lock (SST) (Previous Construction)	1
19	00-857919-00007	Screw - Wing M6 x 12 (SST) (Previous Construction)	1

* Call for Price and Availability
** Retro fit to older unit

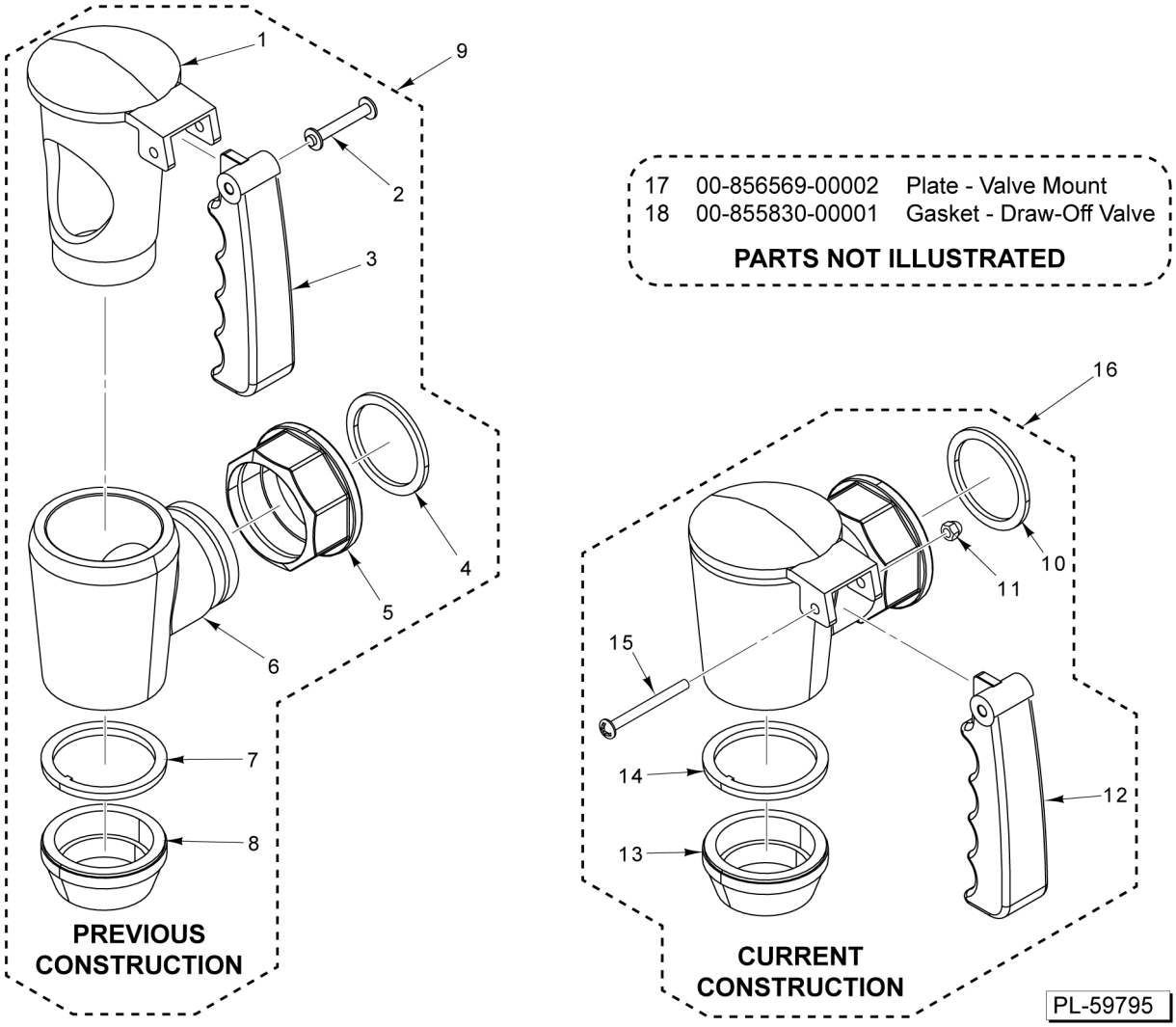

PLUG VALVE
(2 INCH)

PLUG VALVE
(2 INCH)

ILLUS. PL-59795	PART NO.	NAME OF PART	AMT.
1	00-857547-00004	Plug - Valve (Draw-Off) (Previous Construction)	1
2	00-857547-00007	Pin - Retaining (Previous Construction)	1
3	00-857547-00006	Handle - Athermic (Previous Construction)	1
4	00-857170-00009	Gasket - Coupling (Previous Construction)	1
5	00-857547-00003	Coupling - Valve (Draw-Off) (Previous Construction)	1
6	00-857547-00002	Valve Body (Draw-Off) (Previous Construction)	1
7	00-857547-00005	Washer (Previous Construction)	1
8	00-857547-00008	Ring - Metal (Previous Construction)	1
9	00-857547-00001	Draw-Off Valve Assy. (2 In., Plug Type) (Incls. Items 1 thru 8) (Previous Construction)	1
10	00-858268-00009	Gasket (Current Construction)	1
11	00-858268-00010	Nut, M6 (SST) (Current Construction)	1
12	00-858268-00006	Handle (Current Construction)	1
13	00-858268-00003	Nut, Valve Plug (Current Construction)	1
14	00-858268-00004	Washer (Current Construction)	1
15	00-858268-00007	Screw M6 x 50 (Current Construction)	1
16	00-858268-00001	Draw-Off Valve Assy. 2 In. (Incls. Items 10 thru 15) (Current Construction)	1
17	00-856569-00002	Plate - Valve Mount	1
18	00-855830-00001	Gasket - Draw-Off Valve	1

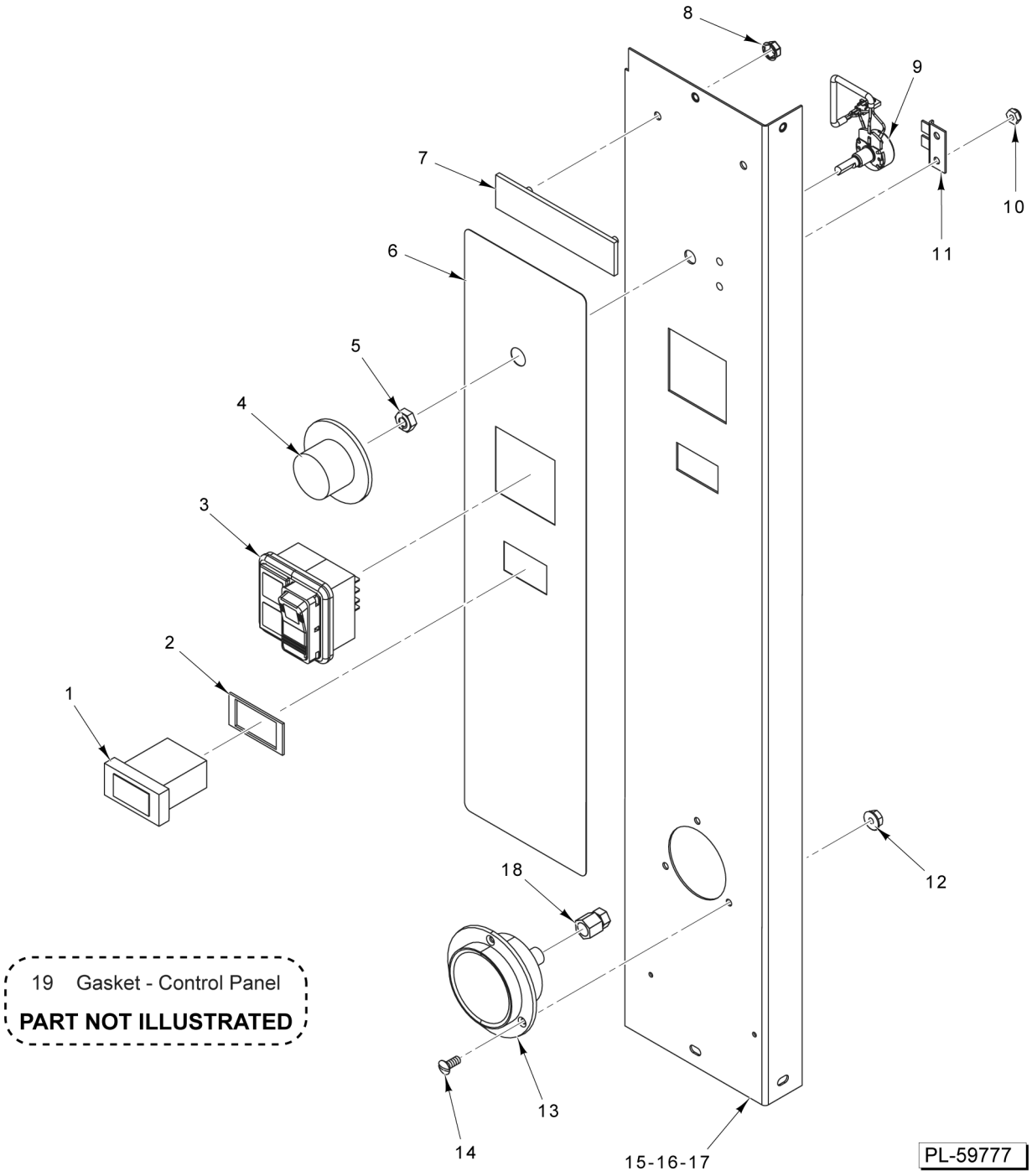

CONTROL PANEL (STATIONARY)

CONTROL PANEL (STATIONARY)

ILLUS. PL-59777	PART NO.	NAME OF PART	AMT.
1	00-855969-00001	Light - Indicator (Red) (24 VAC)	1
2	00-856678-00001	Gasket	1
3	00-855797-00005	Switch Assy. (Power with Indicator Lights)	1
4	00-854647-00001	Knob - Control	1
5	00-854693-00001	Shaft - Rotary Seal	1
6	00-855831-00001	Overlay - Gas Kettle	1
7	00-957916-00003	Nameplate - Small (Vulcan)	1
8	NS-047-28	Lock Nut 3/16 STUD (PALNUT SK188008)	2
9	00-857389-00001	Potentiometer	1
10	NS-047-98	Lock Nut 8-32 Hex	2
11	00-856119-00001	Bracket - Offset	1
12	NS-011-07	Nut 6-32 Hex (SST)	3
13	00-856083-00001	Gauge - Pressure (Panel Mount)	1
14	SC-129-39	Mach. Screw 6-32 x 5/16 Slotted Oval Hd. (SST)	3
15	00-855884-00001	Panel - Control (K20GL)	1
16	00-856040-00001	Panel - Control (K40GL)	1
17	00-856122-00001	Panel - Control (K60GL)	1
18	FP-086-36	Fitting - Tube (1/4)	1
19	00-831912-00013	Gasket - Control Panel	1

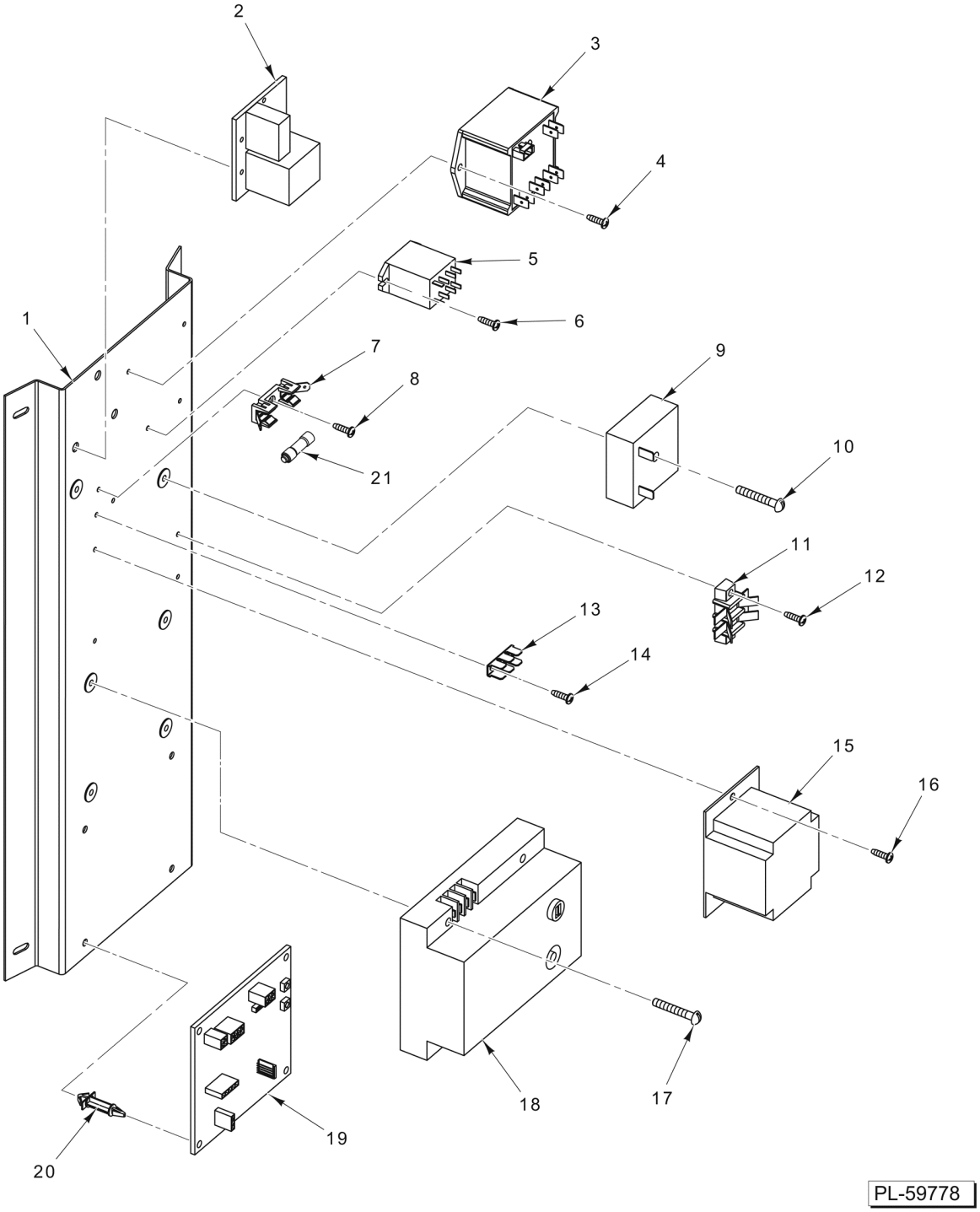

ELECTRICAL COMPONENTS (STATIONARY)

ELECTRICAL COMPONENTS (STATIONARY)

ILLUS. PL-59778	PART NO.	NAME OF PART	AMT.
1	00-855863-00001	Bracket - Ignition Module	1
2	00-844070-00001	Control - Low Water	1
3	00-857112-00001	Controller - Temperature	1
4	SD-019-29	Self-Tapping Screw 6-20 x 1/2 Phil. Pan Hd., Type B	2
5	00-416535-00004	Relay - Filter - Fill Valve S.P.D.T. 24 V. Coil	1
6	SD-019-29	Self-Tapping Screw 6-20 x 1/2 Phil. Pan Hd., Type B	2
7	00-856677-00001	Block - Fuse (20 Amp., 300 V.)	1
8	SD-019-29	Self-Tapping Screw 6-20 x 1/2 Phil. Pan Hd., Type B	1
9	00-855973-00001	Relay - Time Delay	1
10	SC-125-46	Mach. Screw 8-32 x 1-1/4 Phil. Truss Hd. (SST)	1
11	00-854707-00002	Block - Terminal (2-Pole)	1
12	SD-019-29	Self-Tapping Screw 6-20 x 1/2 Phil. Pan Hd., Type B	2
13	00-419317	Terminal - Stationary	1
14	SD-019-29	Self-Tapping Screw 6-20 x 1/2 Phil. Pan Hd., Type B	2
15	00-411500-00012	Transformer (120 VAC, 24 V., 40 VA)	1
16	SD-019-29	Self-Tapping Screw 6-20 x 1/2 Phil. Pan Hd., Type B	2
17	SC-125-46	Mach. Screw 8-32 x 1-1/4 Phil. Truss Hd. (SST)	4
18	00-913169	Kit - Ignition Module	1
19	00-855867-00001	Board-Blower Control, universal (EBM)	1
20	00-857060-00001	Standoff - Board	4
21	FE-024-94	Fuse - Time Delay (4.0 Amp.)	1

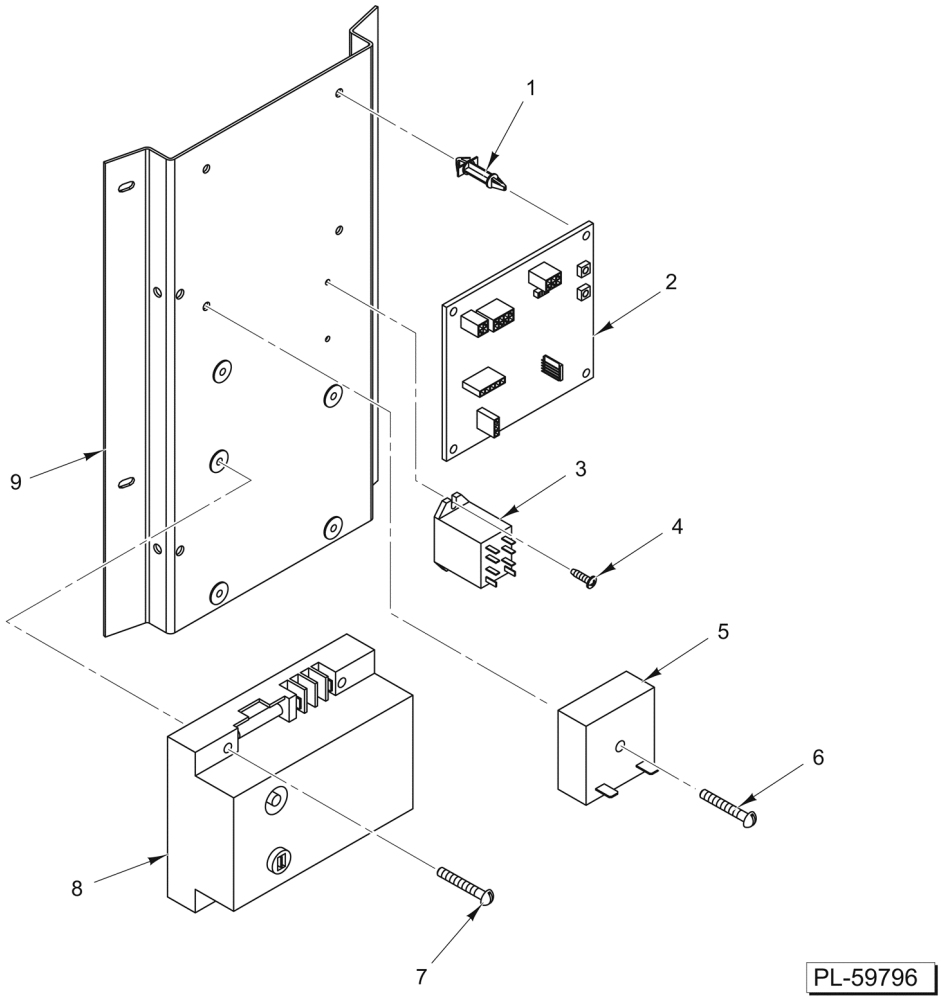

ELECTRICAL COMPONENTS (TILTING)

ELECTRICAL COMPONENTS (TILTING)

ILLUS. PL-59796	PART NO.	NAME OF PART	AMT.
1	00-857060-00001	Standoff - Board	4
2	00-855867-00001	Board-Blower Control, universal (EBM)	1
3	00-416535-00004	Relay - Filter - Fill Valve S.P.D.T. 24 V. Coil	1
4	SD-019-29	Self-Tapping Screw 6-20 x 1/2 Phil. Pan Hd., Type B	2
5	00-855973-00001	Relay - Time Delay	1
6	SC-125-46	Mach. Screw 8-32 x 1-1/4 Phil. Truss Hd. (SST)	1
7	SC-125-46	Mach. Screw 8-32 x 1-1/4 Phil. Truss Hd. (SST)	4
8	00-913169	Kit - Ignition Module	1
9	00-856954-00001	Bracket - Ignition Module	1

46	00-913102-00399	Kit - Board Assy.
47	FE-027-24	Holder - Fuse
48	FE-027-94	Fuse (4 Amp.)
49	FE-017-94	Fuse (2 Amp.)

PARTS NOT ILLUSTRATED

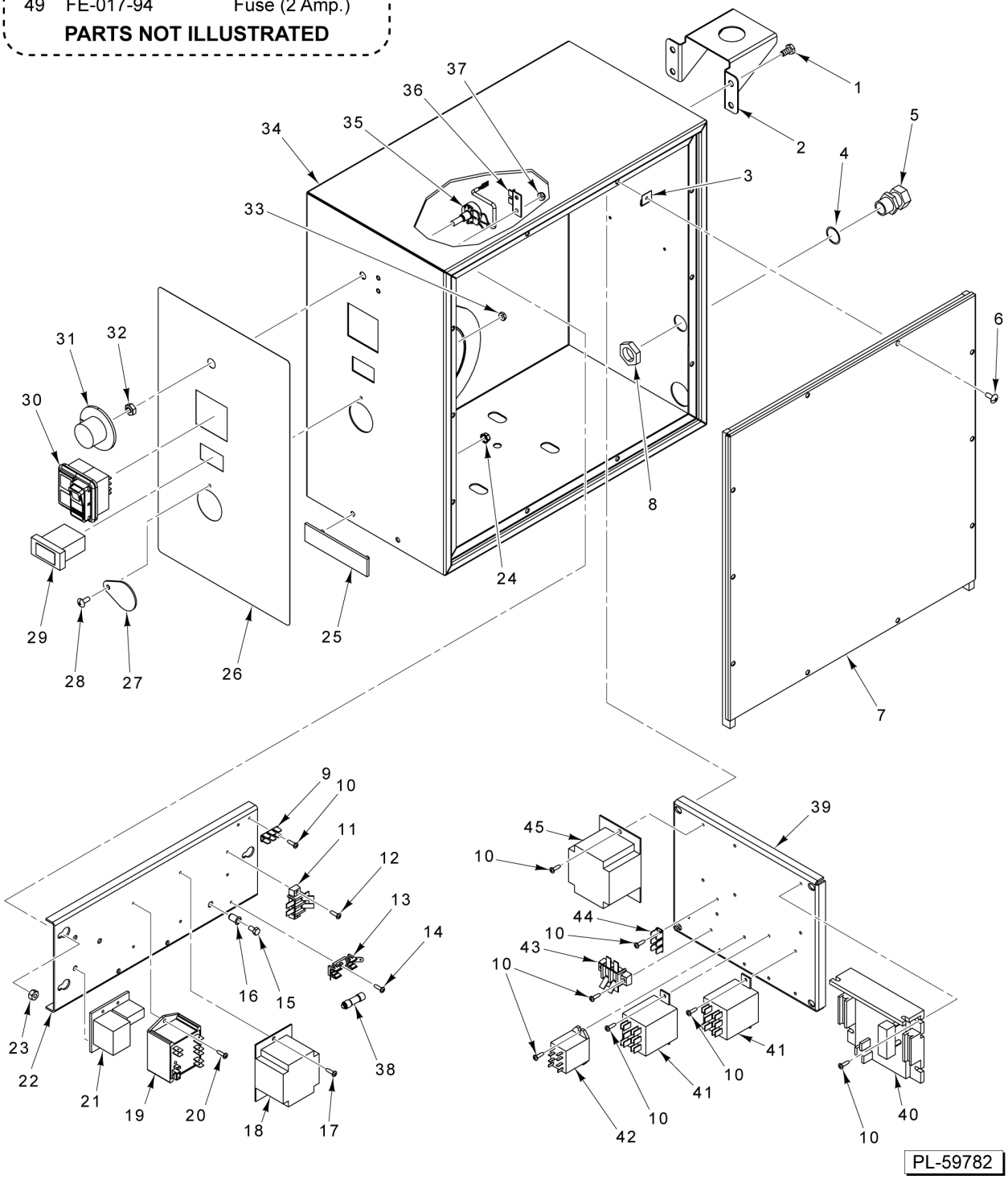

CONTROL PANEL AND ELECTRICAL COMPONENTS (TILTING)

CONTROL PANEL AND ELECTRICAL COMPONENTS (TILTING)

ILLUS. PL-59782	PART NO.	NAME OF PART	AMT.
1	SC-041-50	Cap Screw 1/4-20 x 1/2 Hex Hd. (SST)	4
2	00-855902-00001	Bracket - Faucet	1
3	00-854766-00001	Nut - Speed 3 Type	10
4	00-854763-00002	NLA - Obsolete--O-Ring	1
5	00-854761-00002	Relief - Strain 1/2 Electrical	1
6	SC-066-06	Mach. Screw 10-24 x 1/2 Phil. Truss Hd. (SST)	10
7	00-856210-00001	Lid Assy. - Control Box	1
8	00-854762-00002	NLA - Obsolete--Lock Nut 1/2 Electrical	1
9	00-419317	Terminal - Stationary	1
10	SD-019-29	Self-Tapping Screw 6-20 x 1/2 Phil. Pan Hd., Type B	AR
11	00-854707-00002	Block - Terminal (2-Pole)	1
12	SD-019-29	Self-Tapping Screw 6-20 x 1/2 Phil. Pan Hd., Type B	2
13	00-856677-00001	Block - Fuse (20 Amp., 300 V.)	1
14	SD-019-29	Self-Tapping Screw 6-20 x 1/2 Phil. Pan Hd., Type B	1
15	SC-120-23	Mach. Screw 10-24 x 3/8 Hex Hd	1
16	00-328479-00002	Nut - Insert	1
17	SD-019-29	Self-Tapping Screw 6-20 x 1/2 Phil. Pan Hd., Type B	2
18	00-411500-00012	Transformer (120 VAC, 24 V., 40 VA)	1
19	00-857112-00001	Controller - Temperature	1
20	SD-019-29	Self-Tapping Screw 6-20 x 1/2 Phil. Pan Hd., Type B	2
21	00-844070-00001	Control - Low Water	1
22	00-856847-00001	Panel - Electrical	1
23	NS-015-01	Nut 1/4-20 Hex (SST)	3
24	NS-047-28	Lock Nut 3/16 STUD (PALNUT SK188008)	2
25	00-957916-00003	Nameplate - Small (Vulcan)	1
26	00-855889-00001	Overlay - Tilting Gas Kettles	1
27	00-856218-00001	NLA - Obsolete--Flap - Tilt Handle Opening	1
28	SC-066-06	Mach. Screw 10-24 x 1/2 Phil. Truss Hd. (SST)	1
29	00-855969-00001	Light - Indicator (Red) (24 VAC)	1
30	00-857971-00001	CONTROL SWITCH ASSY - AUTO	1
31	00-854647-00001	Knob - Control	1
32	00-854693-00001	Shaft - Rotary Seal	1
33	NS-011-18	Nut 10-24 Hex (SST)	1
34	00-856816-00001	Box - Control	1
35	00-857389-00001	Potentiometer	1
36	00-856119-00001	Bracket - Offset	1
37	NS-047-98	Lock Nut 8-32 Hex	2
38	FE-024-94	Fuse - Time Delay (4.0 Amp.)	1
39	00-857968-00001	Control Mount (Before S/N 463028412)	1
40	00-854671-00001	Controller - Speed (Before S/N 463028412)	1
41	00-854545-00001	Relay (Before S/N 463028412)	2
42	00-856699-00001	Switch - Relay (Before S/N 463028412)	1
43	00-854707-00002	Block - Terminal (2-Pole) (Before S/N 463028412)	1
44	00-419317	Terminal - Stationary (Before S/N 463028412)	1
45	00-411500-00012	Transformer (120 VAC, 24 V., 40 VA) (Before S/N 463028412)	1
46	00-913102-00399	Kit - Board Assy. (Starting S/N 463028412)	AR
47	FE-027-24	Holder - Fuse (Starting S/N 463028412)	AR
48	FE-024-94	Fuse - Time Delay (4.0 Amp.) (Starting S/N 463028412)	AR
49	FE-017-03	Fuse (2 Amp.) Slo-Blo (Starting S/N 463028412)	AR

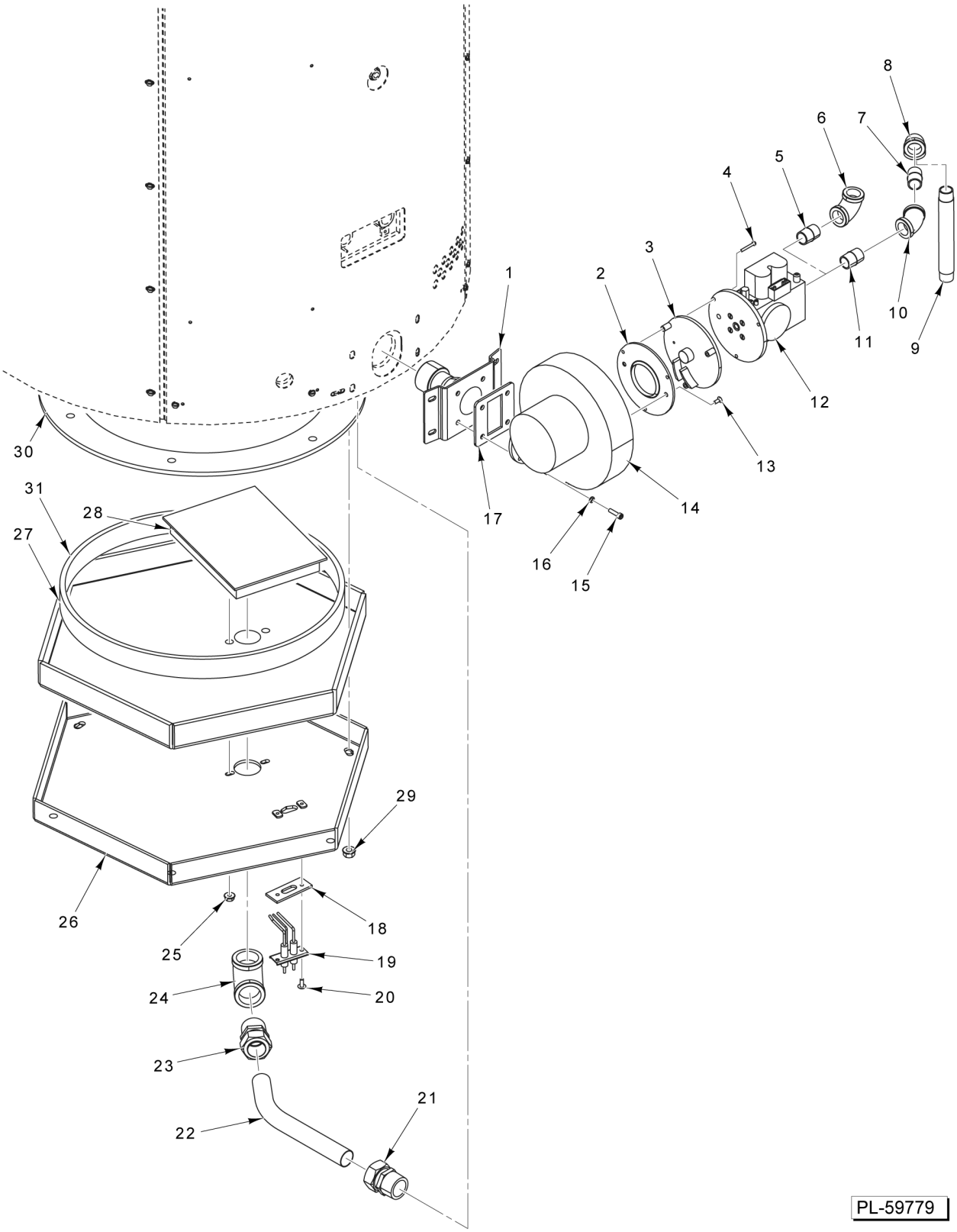

GAS HEAT COMPONENTS

GAS HEAT COMPONENTS

ILLUS. PL-59779	PART NO.	NAME OF PART	AMT.
1	00-856941-00001	Manifold - Burner	1
2	00-855869-00001	Plate	1
3	00-855873-00001	Plate	1
4	00-855878-00001	Screw	3
5	FP-035-91	Pipe 1/2 x 1-1/8 TBE (Tilting Kettles)	1
6	FP-013-15	Elbow - Pipe 1/2 x 90 Deg. (Tilting Kettles)	1
7	FP-035-91	Pipe 1/2 x 1-1/8 TBE (Stationary Kettles)	1
8	FP-013-15	Elbow - Pipe 1/2 x 90 Deg. (Stationary Kettles)	1
9	FP-059-63	Pipe 1/2 x 6 TBE (Stationary Kettles)	1
10	FP-013-14	Elbow - Pipe 1/2 x 45 Deg. (Stationary Kettles)	1
11	FP-035-91	Pipe 1/2 x 1-1/8 TBE (Stationary Kettles)	1
12	00-856940-00001	Valve Assy. - Gas	1
13	00-855877-00001	Screw	2
14	00-855868-00001	Blower Assy	1
15	SC-123-01	Cap Screw 10-24 x 3/4 Hex Socket Hd. (SST)	4
16	WL-006-07	Lockwasher #10 Helical (SST)	4
17	00-855649-00001	Gasket - Blower	1
18	00-855935-00001	Gasket - Spark Ignitor	1
19	00-855843-00001	Ignitor - Spark (Incls. High Voltage and Flame Sense Leads	1
20	SC-066-06	Mach. Screw 10-24 x 1/2 Phil. Truss Hd. (SST)	2
21	FP-091-19	Fitting - Tube (1 In.) (Brass)	1
22	00-858071-00001	Tube - Gas Supply	1
23	FP-091-19	Fitting - Tube (1 In.) (Brass)	1
24	FP-013-27	Elbow - Pipe 1 x 90 Deg.	1
25	NS-038-04	Lock Nut 1/4-20 Flange	2
26	00-855980-00001	Cover - Combustion Chamber	1
27	00-855950-00001	Insulation	1
28	00-855826-00001	Burner - Flat	1
29	NS-038-10	Lock Nut 3/8-16 Flange	6
30	00-856102-00001	Seal Ring	1
31	00-855914-00001	Ring - Floating Seal	1

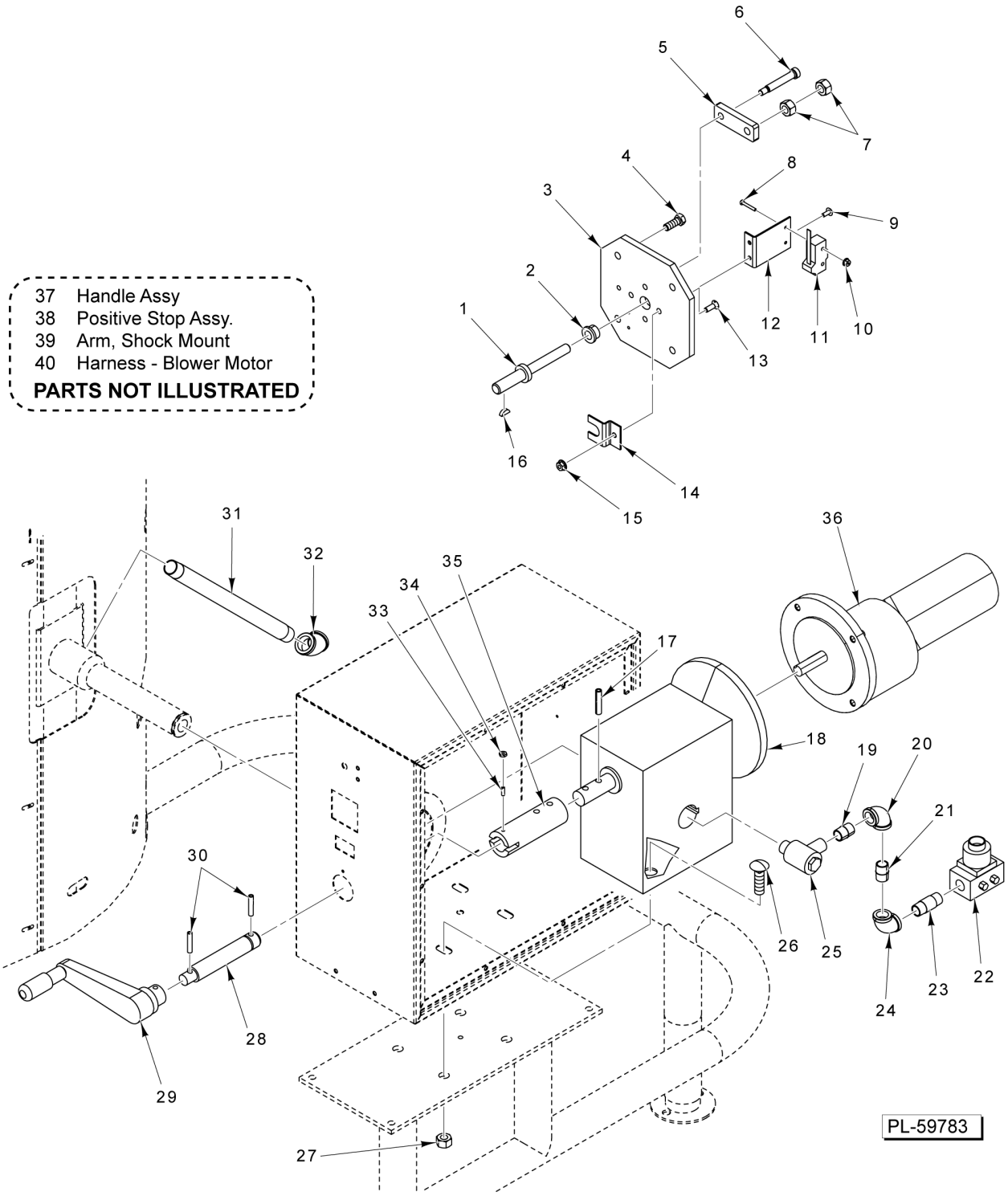

TILTING COMPONENTS

TILTING COMPONENTS

ILLUS. PL-59783	PART NO.	NAME OF PART	AMT.
1	00-856856-00001	Shaft - Positive Stop	1
2	00-857295-00001	Bearing 1/2 (Bronze)	1
3	00-856854-00001	Plate - Positive Stop	1
4	SC-041-30	Cap Screw 3/8-16 x 1 Hex Hd. (SST)	4
5	00-856855-00001	Traveller - Positve Stop	1
6	SC-130-09	Shoulder Screw 3/8 Dia. 5/16-18 x 2 Hex Socket Hd	1
7	NS-049-30	Jam Nut 1/2-20 Hex	2
8	SC-119-51	Mach. Screw 6-32 x 1 Slotted Pan Hd. (SST)	2
9	SC-066-06	Mach. Screw 10-24 x 1/2 Phil. Truss Hd. (SST)	2
10	NS-038-01	Lock Nut 6-32 Flange	2
11	00-411496-000F1	Switch - Micro	1
12	00-856843-00001	Bracket - Limit Switch	1
13	SC-022-33	Mach. Screw 1/4-20 x 3/4 Slotted Flat Hd. (SST)	1
14	00-856858-00001	Clamp - Positve Stop	1
15	NS-038-04	Lock Nut 1/4-20 Flange	1
16	KW-003-07	Key - Woodruff 3/16 x 5/8	1
17	RP-003-36	Pin - Roll	2
18	00-856184-00002	Gear - Reducer (80:1)	1
19	FP-035-91	Pipe 1/2 x 1-1/8 TBE	1
20	FP-013-15	Elbow - Pipe 1/2 x 90 Deg	1
21	FP-035-91	Pipe 1/2 x 1-1/8 TBE	1
22	00-856004-00001	Valve - Shut-Off	1
23	FP-035-95	Pipe 1/2 x 2 TBE	1
24	FP-013-15	Elbow - Pipe 1/2 x 90 Deg	1
25	00-856838-00001	Fitting 1/2 Swivel	1
26	SC-082-45	Bolt Sq. Neck 1/2-13 x 1-1/2 Rd. Hd. (SST)	4
27	NS-015-20	Nut 1/2-13 Hex (SST)	4
28	00-854652-00002	Shaft - Crank Handle	1
29	00-854651-00001	Handle - Crank	1
30	RP-002-46	Pin - Roll	2
31	FP-042-41	Pipe 3/4 x 14-7/8 TBE (Brass)	1
32	FP-013-20	Elbow 3/4 x 45 Deg	1
33	00-854649-00001	Detent - Ball	1
34	NS-011-18	Nut 10-24 Hex (SST)	1
35	00-854644-00002	Extension - Shaft Reducer	1
*36	00-854653-00001	Motor - Gear	1
37	00-854650-00002	Handle Assy. (Incls. Items 28, 29, & 30)	1
38	00-856857-00001	Positive Stop Assy. (Incls. Items 1 thru 16)	1
39	00-857927-00001	Arm, Shock Mount	1
40	00-856961	Harness - Blower Motor	1

* Use Kit 00-913102-00399 when replacing motor

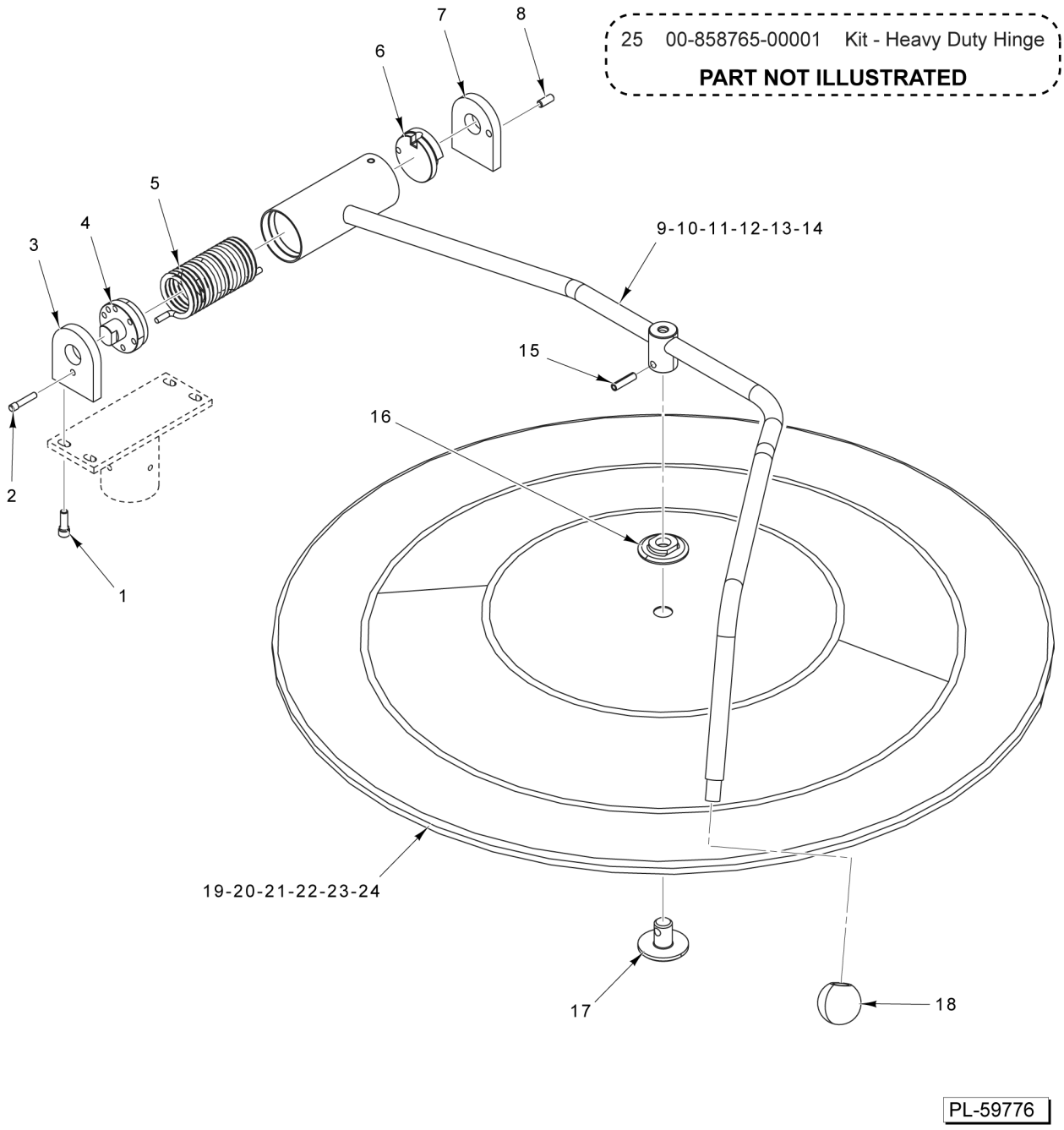

LID AND HANDLE ASSEMBLY

LID AND HANDLE ASSEMBLY

ILLUS. PL-59776	PART NO.	NAME OF PART	AMT.
1	SC-110-98	Cap Screw 1/4-20 x 3/4 Hex Socket Hd. (SST)	4
2	00-853284-00001	Pin - Lock	1
3	00-853286-00001	Plate - Front	1
4	00-853292-00001	Disc - Tension Adjustment	1
5	00-853289-00001	Spring - Torsion	1
6	00-853293-00001	Disc - Rotary Stop	1
7	00-855220-00002	Plate - Rear (Incls. Item 8)	1
8	00-855221-00001	Pin - Stop	1
9	00-856507-00001	Handle Assy. (ML-136090)	1
10	00-856511-00001	Handle Assy. (ML-136091)	1
11	00-856514-00001	Handle Assy. (ML-136092)	1
12	00-855880-00001	Handle Assy. (ML-136094)	1
13	00-855886-00001	Handle Assy. (ML-136095)	1
14	00-856287-00001	Handle Assy. (ML-136096)	1
15	RP-004-31	Roll Pin 1/4 x 1	1
16	00-853568-00001	Nut - Kettle Cover	1
17	00-853567-00001	Rocker - Kettle Cover	1
18	00-853285-00001	Knob - Press On	1
19	00-856490-00002	Lid Assy. (ML-136090) (Incls. Items 16 & 17)	1
20	00-856495-00002	Lid Assy. (ML-136091) (Incls. Items 16 & 17)	1
21	00-856500-00002	Lid Assy. (ML-136092) (Incls. Items 16 & 17)	1
22	00-856490-00005	Lid Assy. (ML-136094) (Incls. Items 16 & 17)	1
23	00-856495-00004	Lid Assy. (ML-136095) (Incls. Items 16 & 17)	1
24	00-856500-00004	Lid Assy. (ML-136096) (Incls. Items 16 & 17)	1
25	00-858765-00001	Kit - Heavy Duty Hinge	AR

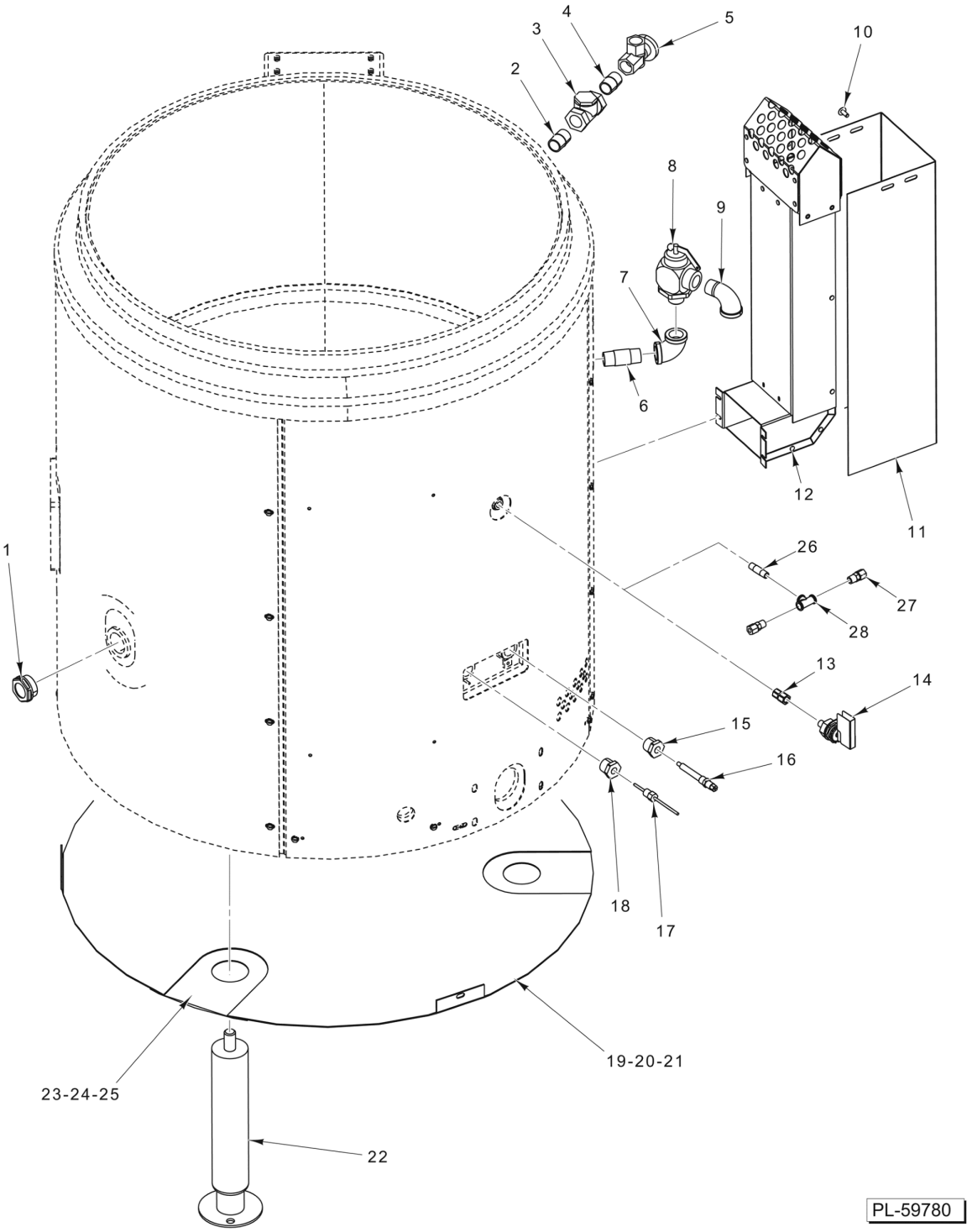

KETTLE EXTERIOR

KETTLE EXTERIOR

ILLUS. PL-59780	PART NO.	NAME OF PART	AMT.
1	00-855882-00001	Glass - Level Sight	1
2	FP-054-08	Pipe 1/2 x 1-1/8 TBE (SST)	1
3	00-833648-00002	Valve - Swing Check 1/2" (Brass)	1
4	FP-054-08	Pipe 1/2 x 1-1/8 TBE (SST)	1
5	00-833501	Valve 1/2 Angle	1
6	FP-040-50	Pipe 1/2 x 2 TBE (Brass)	1
7	FP-015-16	Elbow - Pipe 1/2 x 90 Deg. (Brass)	1
8	00-855968-00001	Valve - Relief (50 PSI)	1
9	FP-015-17	Elbow - Pipe 1/2 x 90 Deg. (Brass)	1
10	SC-066-06	Mach. Screw 10-24 x 1/2 Phil. Truss Hd. (SST)	4
11	00-856200-00001	Shield - Flue	1
12	00-855833-00001	Flue Assy. (Incls. Items 10 & 11)	1
13	FP-012-10	Fitting - Tube 1/4 (Brass)	1
14	00-856045-00001	Switch - Pressure	1
15	FP-027-06	Bushing - Pipe 1/2 To 1/8 (Brass)	1
16	00-855856-00001	Probe - Water Level	1
17	00-856042-00001	Sensor - Temperature	1
18	FP-027-06	Bushing - Pipe 1/2 To 1/8 (Brass)	1
19	00-856966-00001	Cover - Bottom (ML-136090)	1
20	00-857155-00001	Cover - Bottom (ML-136091)	1
21	00-856988-00001	Cover - Bottom (ML-136092)	1
22	00-856977-00003	Leg - Adjustable (With Flange Foot) (Stationary Kettles Only)	3
23	00-856314-00001	Cover - Leg (ML-136090)	3
24	00-856128-00001	Cover - Leg (ML-136091)	3
25	00-856251-00001	Cover - Leg (ML-136092)	3
26	FP-040-03	Pipe 1/8 x 1-3/8 TBE (Brass) (Tilting Kettles Only)	1
27	FP-012-16	Fitting - Tube (1/4) (Tilting Kettles Only)	2
28	FP-019-02	Tee - Pipe 1/8 x 1/8 x 1/8 (Tilting Kettles Only)	1
	00-855963-00001	Fill Assy. (Incls. Items 2 thru 5)	1
	00-856918-00001	Cover - Bottom (ML-136094)	1
	00-856953-00001	Cover - Bottom (ML-136095)	1
	00-856846-00001	Cover - Bottom (ML-136096)	1

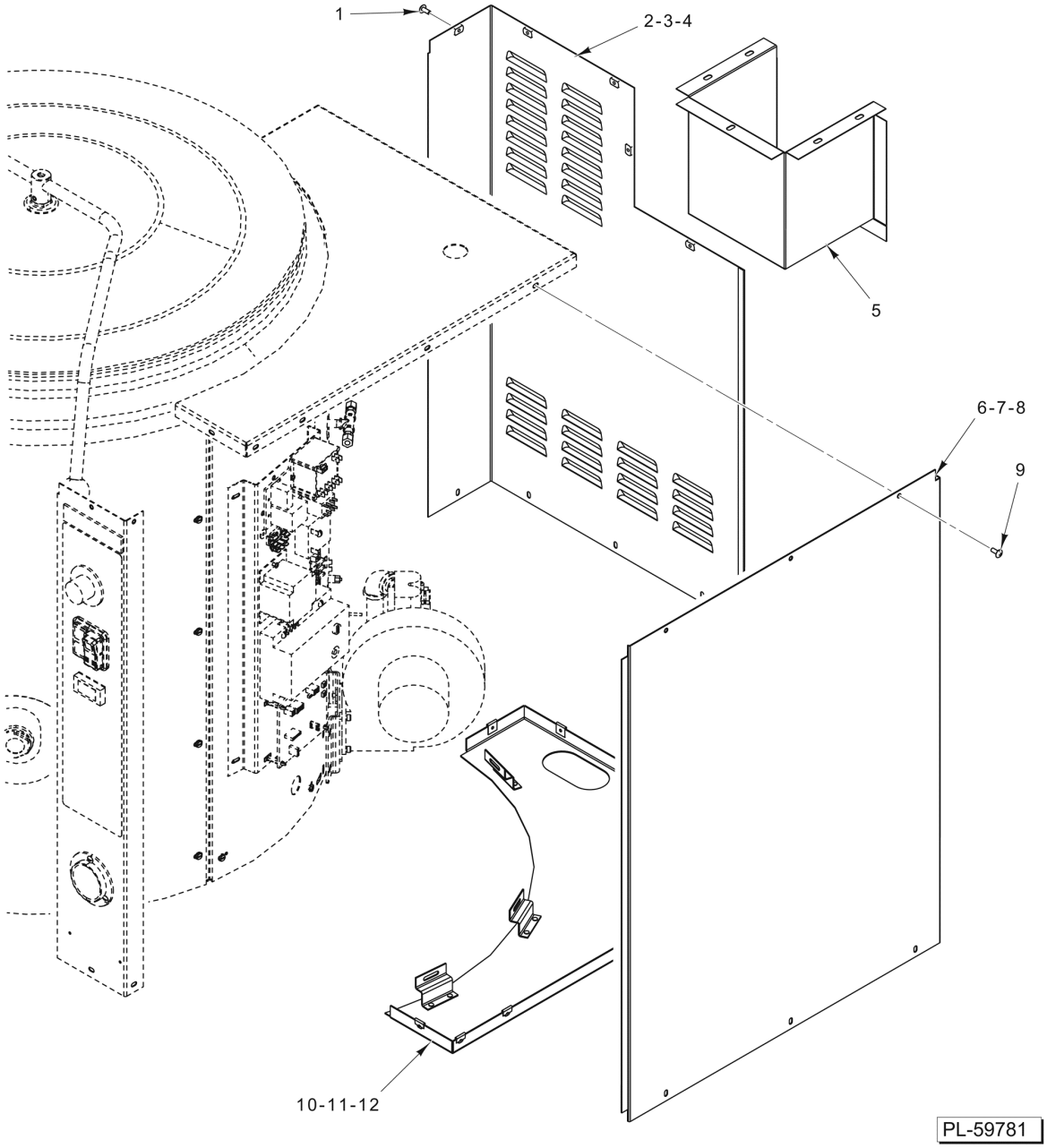

PANELS (STATIONARY)

PANELS (STATIONARY)

ILLUS. PL-59781	PART NO.	NAME OF PART	AMT.
1	SC-066-06	Mach. Screw 10-24 x 1/2 Phil. Truss Hd. (SST)	9
2	00-856313-00001	Panel - Rear (ML-136090)	1
3	00-856047-00001	Panel - Rear (ML-136091)	1
4	00-855979-00001	Panel - Rear (ML-136092)	1
5	00-856206-00001	Bracket - Faucet	1
6	00-856312-00001	Panel - Side (ML-136090)	1
7	00-856044-00001	Panel - Side (ML-136091)	1
8	00-855987-00001	Panel - Side (ML-136092)	1
9	SC-066-06	Mach. Screw 10-24 x 1/2 Phil. Truss Hd. (SST)	6
10	00-855939-00001	Panel - Bottom (ML-136090)	1
11	00-855860-00001	Panel - Bottom (ML-136091)	1
12	00-855918-00001	Panel - Bottom (ML-136092)	1

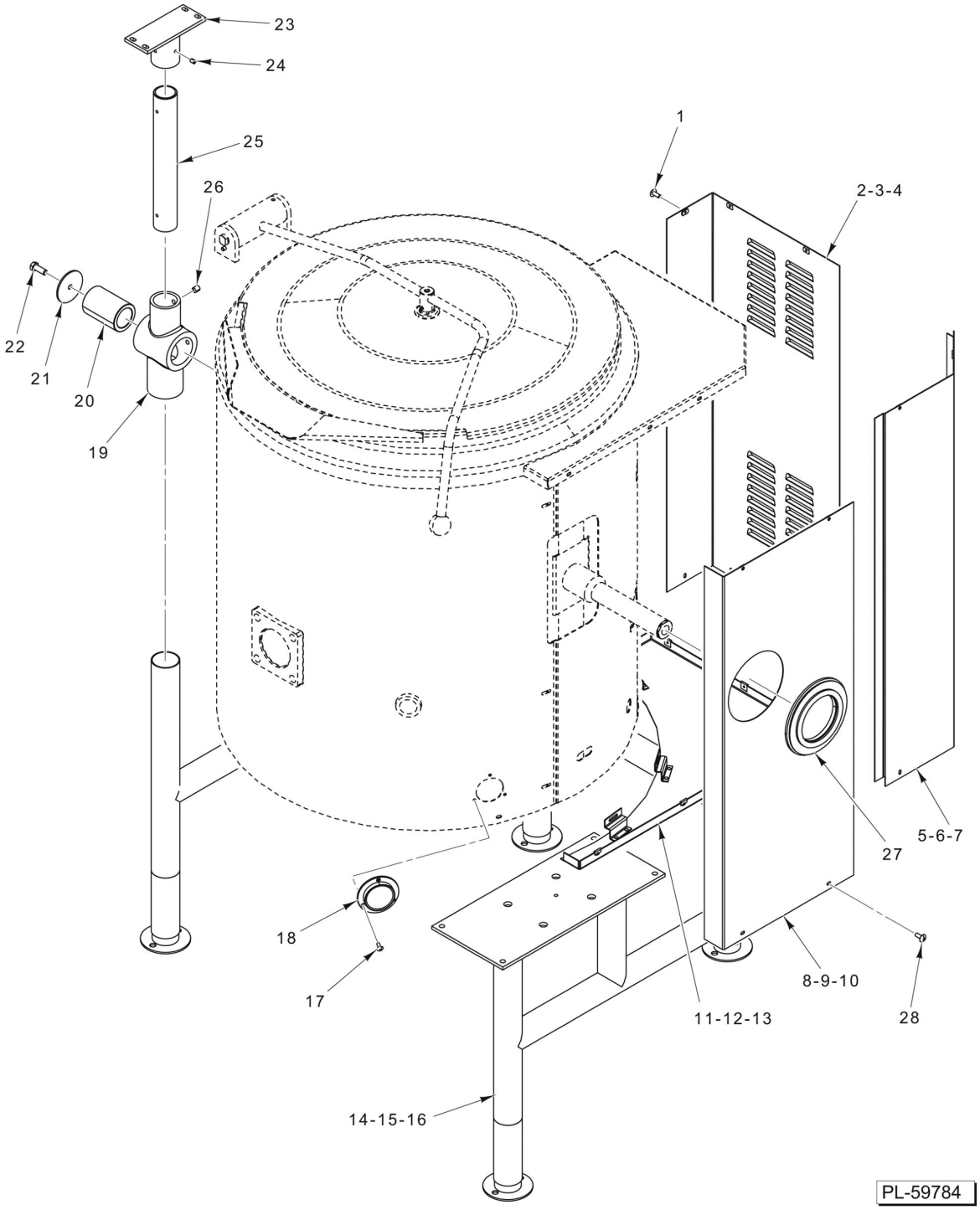

PANELS AND FRAME (TILTING)

PANELS AND FRAME (TILTING)

ILLUS. PL-59784	PART NO.	NAME OF PART	AMT.
1	SC-066-06	Mach. Screw 10-24 x 1/2 Phil. Truss Hd. (SST)	AR
2	00-856368-00001	Panel - Rear (ML-136094)	1
3	00-856943-00001	Panel - Rear (ML-136095)	1
4	00-856130-00001	Panel - Rear (ML-136096)	1
5	00-856369-00001	Panel - Corner (ML-136094)	1
6	00-856219-00001	Panel - Corner (ML-136095)	1
7	00-856129-00001	Panel - Corner (ML-136096)	1
8	00-856373-00001	Panel - Side (ML-136094)	1
9	00-856252-00001	Panel - Side (ML-136095)	1
10	00-856132-00001	Panel - Side (ML-136096)	1
11	00-856912-00001	Panel - Bottom (ML-136094)	1
12	00-857153-00001	Panel - Bottom (ML-136095)	1
13	00-856986-00001	Panel - Bottom (ML-136096)	1
14	00-856892-00001	Frame Assy. (ML-136094)	1
15	00-856929-00001	Frame Assy. (ML-136095)	1
16	00-856801-00001	Frame Assy. (ML-136096)	1
17	SC-129-39	Mach. Screw 6-32 x 5/16 Slotted Oval Hd. (SST)	3
18	00-856083-00001	Gauge - Pressure (Panel Mount)	1
19	00-856183-00001	Pivot Assy	1
20	00-856180-00001	Bushing	1
21	00-856182-00001	NLA - Obsolete--Washer - Retainer	1
22	SC-041-30	Cap Screw 3/8-16 x 1 Hex Hd. (SST)	1
23	00-856510-00001	Bracket - Lid Support	1
24	SC-047-12	Set Screw 1/4-20 x 3/8 Hex Hdls., Knife Cup Pt	4
25	00-856311	Mast - Lid Support	1
26	SC-047-43	Set Screw 3/8-16 x 1/2 Hex Hdls., Knife Cup Pt	4
27	00-855989-00001	Seal - Shaft	1
28	SD-009-41	Self-Tapping Screw 8-32 x 3/8 Phil. Pan Hd., Type F (SST)	AR
	00-856183-00001	Pivot Assy. (Incls. Items 19, 20, & 26)	1
	00-855882-00001	Glass - Level Sight	1
	00-851318-00001	Flex Line	1