CATALOG OF REPLACEMENT PARTS

MODEL 823, 823E, & 825E SLICERS

FORM 43188 (May 2015)

 © 2015

Table of Contents

5 ELECTRICAL AND HOUSING
7 MEAT TABLE AND CARRIAGE
9 KNIFE AND GAUGE PLATE ASSEMBLY
11 SHARPENER ASSEMBLY

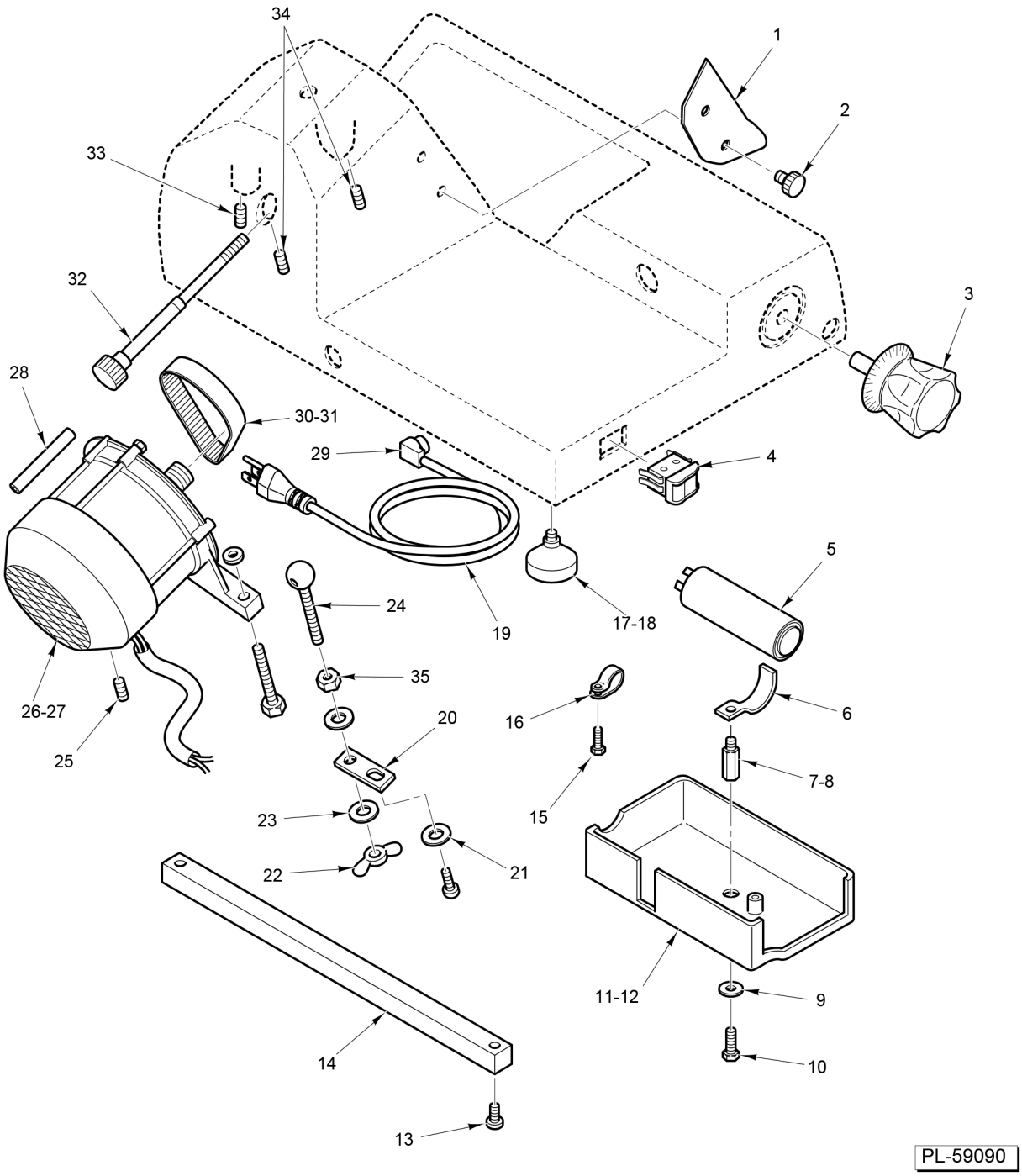

ELECTRICAL AND HOUSING

ELECTRICAL AND HOUSING

ILLUS. PL-59090	PART NO.	NAME OF PART	AMT.
1	01-400825-00011	Deflector - Slicer	1
2	01-400825-00091	Knob - Slice Deflector	1
3	01-400825-0035A	Knob - Index	1
4	01-400823-039-1	Switch - Rocker	1
5	01-400827-00042	Capacitor	1
6	01-400825-00043	Clamp - Capacitor (823E & 825E)	1
7	01-400823-00407	Spacer (823E & 825E)	1
8	01-400823-00128	Spacer (823)	1
9	01-400825-00006	Washer	1
10	01-400825-00021	Screw	1
11	01-400823-00199	Cover (823)	1
12	01-400823-00406	Cover (823E & 825E)	1
13	01-400825-00021	Screw	2
14	01-400823-00014	Rail - Square Bar	1
15	01-400825-00032	Screw	1
16	01-403675-00224	Clamp - Cord (823E & 825E)	1
17	01-400825-00093	Foot - Rubber (5mm Threads)	1
18	01-400825-093-1	Foot - Rubber (6mm Threads)	1
19	01-404175-00031	Cord - Power	1
20	01-400825-00055	Plate	1
21	01-400825-00006	Washer	1
22	01-400825-00056	Nut - Wing	1
23	01-400825-00006	Washer	2
24	01-400825-00053	Tie Rod - Motor	1
25	01-400825-00086	Screw - Grub	1
26	01-400823-00048	Motor - V-Belt (823 With V-Belts)	1
27	01-400823-0048R	Motor - Ribbed Flat Belt	1
28	01-400825-00060	Pin	1
29	01-402675-00562	Clamp - Cord	1
30	01-400825-00066	Belt - V (2 Needed) (823)	2
31	01-400825-0066B	Belt (Ribbed Flat Belt)	1
32	01-400823-0075A	Tie Rod - Center Plate	1
33	01-400825-00086	Screw - Grub	1
34	01-400823-00061	Set Screw	2
35	01-402175-00387	Nut	1

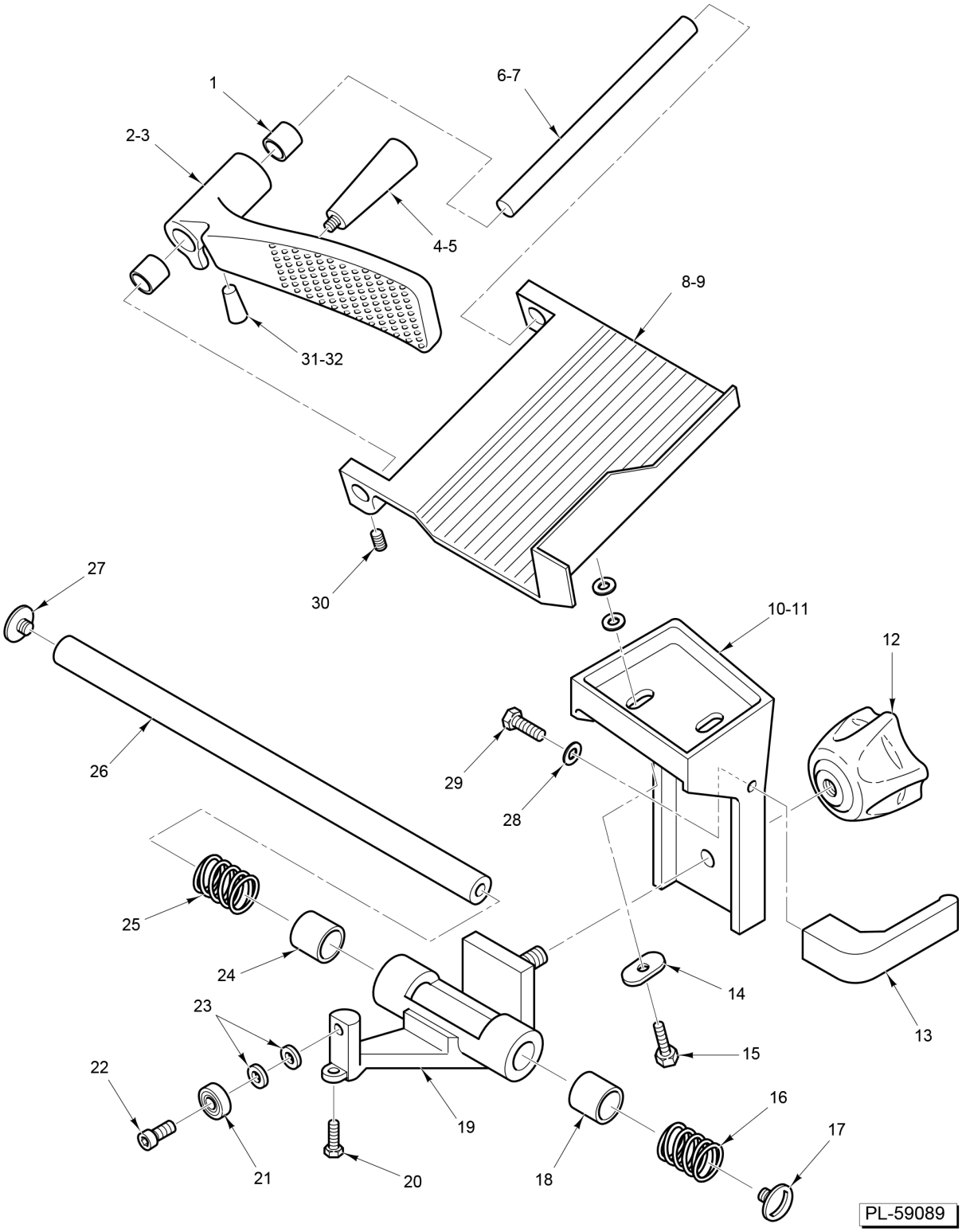

MEAT TABLE AND CARRIAGE

MEAT TABLE AND CARRIAGE

ILLUS. PL-59089	PART NO.	NAME OF PART	AMT.
1	01-400825-00079	Bushing (2-5/8 In.)	2
2	01-400823-00009	Pusher - Complete (823 & 823E)	1
3	01-400825-00009	Pusher - Complete (825E)	1
4	01-400825-0080A	Handle - Pusher (Red) (6mm Threads)	1
*5	01-400825-080-1	Handle - Pusher (Red) (8mm Threads)	1
6	01-400825-00084	Shaft (825E)	1
7	01-400823-00084	Shaft (823 & 823E)	1
8	01-400823-00008	Table - Product (823 & 823E)	1
9	01-400825-00008	Table - Product (825E)	1
10	01-400823-00007	Support - Product Table (823)	1
11	01-400823-00402	Support - Product Table (823E & 825E)	1
12	01-400823-0040A	Knob - Carriage (Red)	1
13	01-400827-0037A	Handle - Product Table (Red)	1
14	01-400825-00131	Washer	1
15	01-400825-00087	Screw	1
16	01-400825-00020	Spring	1
17	01-400825-00050	Screw	1
18	01-400823-00218	Bushing	1
19	01-400823-00012	Carriage - Complete	1
20	01-400825-00021	Screw	1
21	01-400825-00015	Bearing	1
22	01-400825-00017	Screw	1
23	01-400825-00016	Washer	2
24	01-400823-00218	Bushing	1
25	01-400825-00020	Spring	1
26	01-400823-00013	Rail - Round	1
27	01-400825-00050	Screw	1
28	01-403301-03812	Washer	1
29	01-400825-00089	Screw	1
30	01-400825-00086	Screw - Grub	1
31	01-400823-00082	Pad - Wearing (823 & 823E)	1
32	01-400827-00082	Pad - Wearing (825E)	1

* Use With 823E Machines Built With Serial Numbers from 25955 and 825E Machines Built With Serial Numbers from 46788.

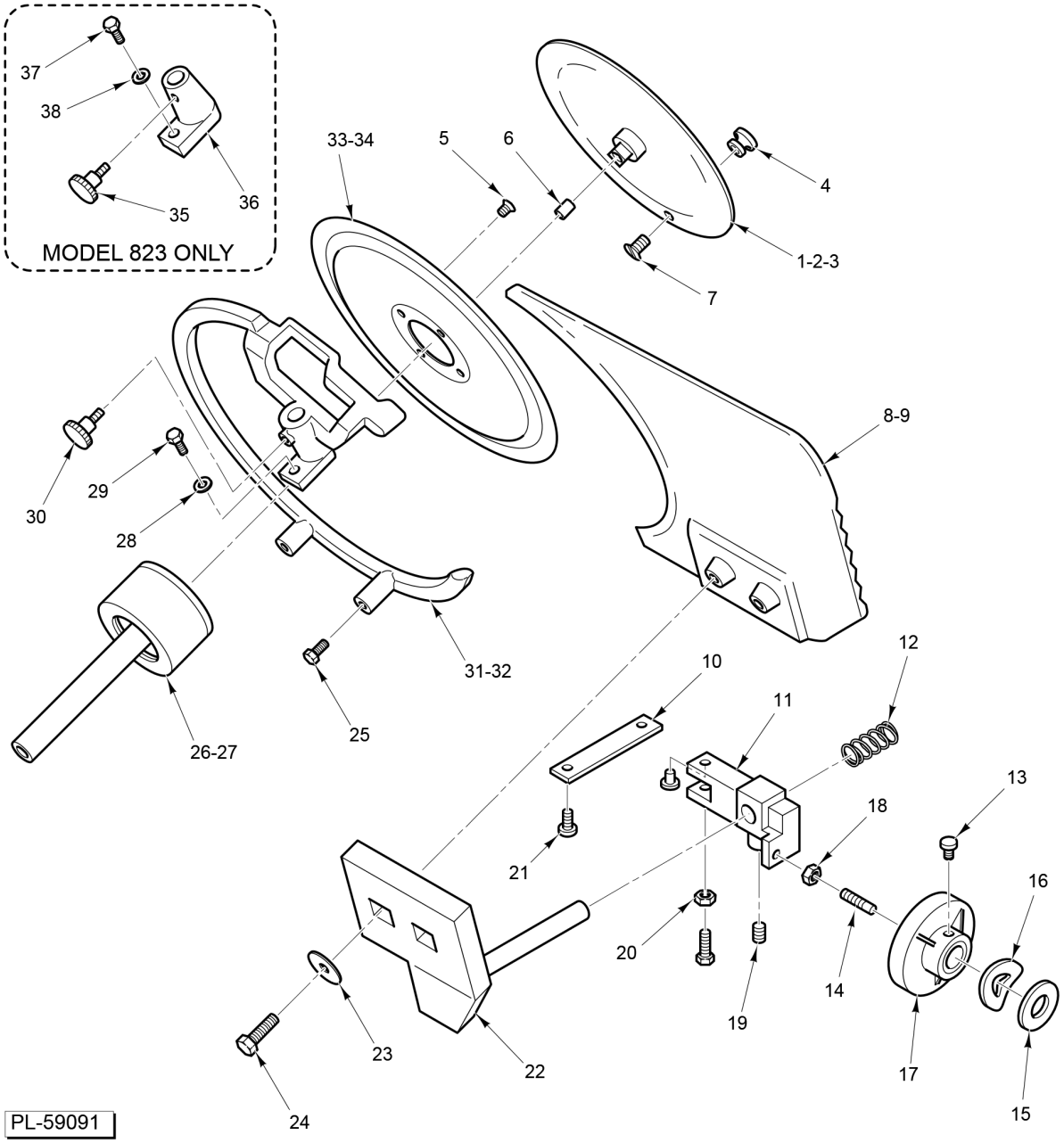

KNIFE AND GAUGE PLATE ASSEMBLY

KNIFE AND GAUGE PLATE ASSEMBLY

ILLUS. PL-59091	PART NO.	NAME OF PART	AMT.
1	01-400823-00002	Plate - Center (823)	1
2	01-400823-00404	Plate - Center (823E)	1
3	01-400825-00401	Plate - Center (825E)	1
4	01-400823-00403	Knob - Knife Cover (Aluminum) (823E & 825E)	1
5	01-400825-00074	Screw - Knife	1
6	01-400825-00135	Insert - Cover	1
7	01-400825-00074	Screw - Knife	1
8	01-400823-00003	Plate - Gauge (823 & 823E)	1
9	01-40825A-00003	Plate - Gauge (825E)	1
10	01-400827-00026	Plate	1
11	01-400823-00022	Support Assy. (Incls. Nylon Pin and Brass Screw)	1
12	01-400825-00024	Spring	1
13	01-400825-00021	Screw	1
14	01-400825-00027	Pin - Cam	1
15	01-400823-00405	Washer (823E & 825E)	1
16	01-400825-00095	Washer - Spring	1
17	01-400825-00025	Index Cam	1
18	01-402175-00387	Nut	1
19	01-400825-00031	Screw - Grub	1
20	01-400823-00029	Nut	1
21	01-400825-00032	Screw	1
22	01-400823-00004	Plate - Gauge Support	1
23	01-400825-00006	Washer	1
24	01-400825-00089	Screw	1
25	01-400825-00021	Screw (823E & 825E)	1
26	01-400823-067-1	Pulley Assy. (Flat Belt)	1
27	01-400823-00067	Pulley Assy. (2 V-Belts) (823)	1
28	01-400823-00123	Washer	1
29	01-400825-00101	Screw	1
30	01-400827-0103A	Knob (Red)	1
31	01-400825-00408	Guard - Ring (825E)	1
32	01-400823-00408	Guard - Ring (823E)	1
33	01-400825-00073	Knife (825E)	1
34	01-400822-00073	Knife (823 & 823E)	1
35	01-400827-0103A	Knob (Red)	1
36	01-400825-00100	Support - Sharpener (823)	1
37	01-400825-00101	Screw	1
38	01-400823-00123	Washer	1

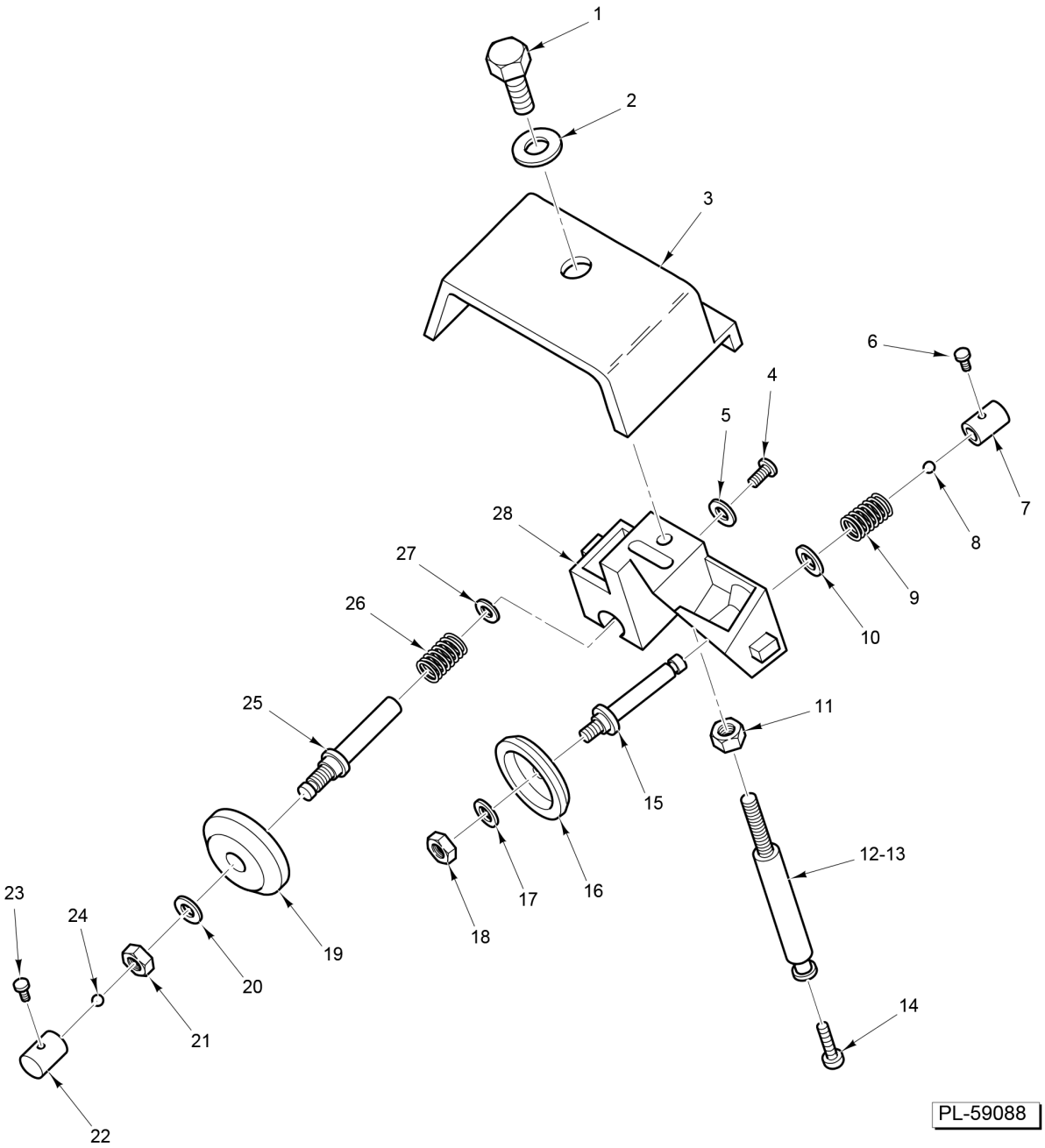

SHARPENER ASSEMBLY

SHARPENER ASSEMBLY

ILLUS. PL-59088	PART NO.	NAME OF PART	AMT.
1	01-400825-00122	Screw	1
2	01-400823-00123	Washer	1
3	01-400823-00400	Cover - Sharpener	1
4	01-402101-02109	Screw	1
5	01-403301-03812	Washer	1
6	01-400825-00118	Screw	1
7	01-400823-00401	Button - Push	1
8	01-402375-00150	Ball 1/8	1
9	01-400825-00117	Spring	1
10	01-403301-03812	Washer	1
11	01-402101-07041	Nut	1
12	01-403375-01418	Shaft - Sharpener (823 & 823E)	1
13	01-403375-01419	Shaft - Sharpener (825E)	1
14	01-400825-00021	Screw	1
15	01-400825-00109	Shaft	1
16	01-400825-00112	Stone	1
17	01-403301-03812	Washer	1
18	01-402175-00387	Nut	1
19	01-400825-00112	Stone	1
20	01-403301-03812	Washer	1
21	01-402175-00387	Nut	1
22	01-400825-00115	Button - Push	1
23	01-400825-00118	Screw	1
24	01-402375-00150	Ball 1/8	1
25	01-400825-00110	Shaft	1
26	01-400825-00117	Spring	1
27	01-403301-03812	Washer	1
28	01-400825-00108	Frame - Sharpener	1
	01-40823E-00130	Sharpener Assy. (Incls. Cover) (823 & 823E)	1
	01-40825A-00130	Sharpener Assy. (Incls. Cover) (825E)	1